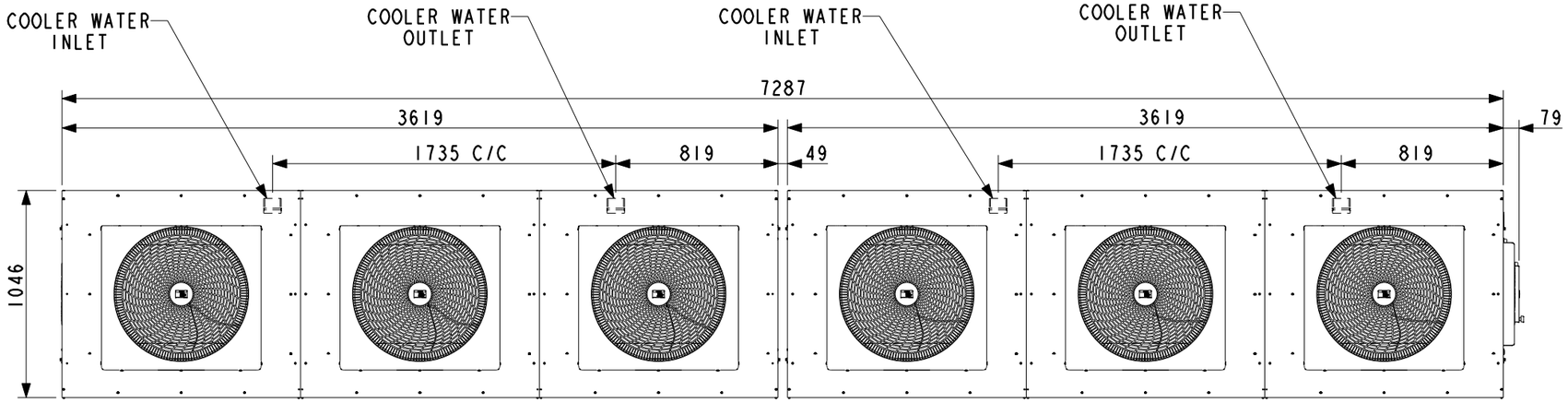

TOP VIEW

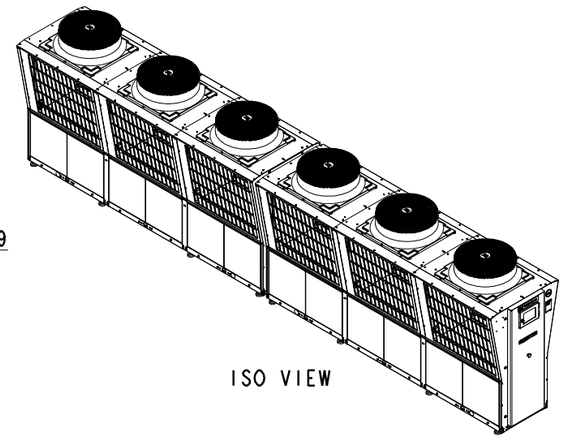

ISO VIEW

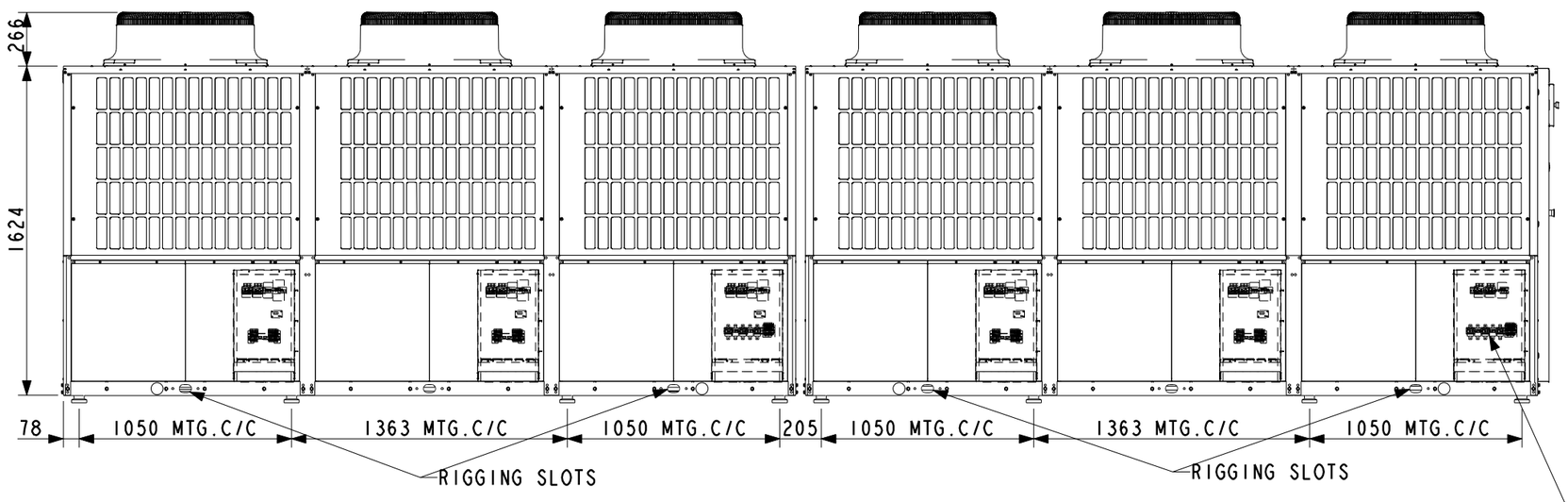

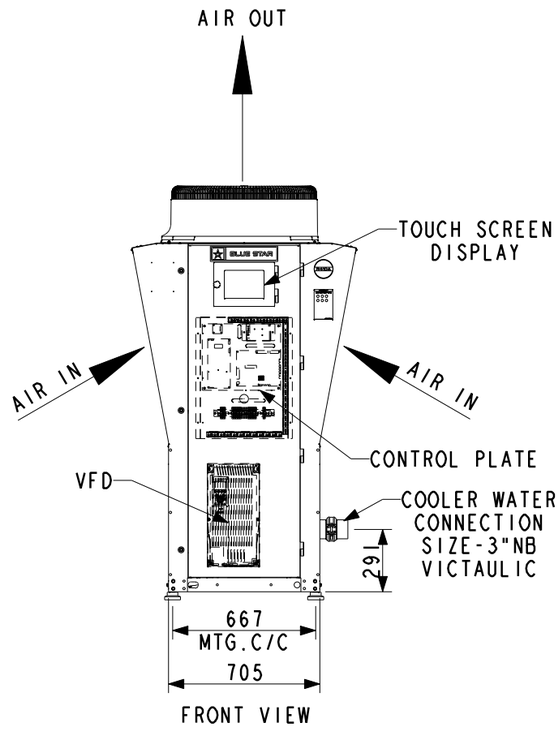

FRONT VIEW

RECOMMENDED CLEARANCES TO PREVENT CONDENSOR AIR RECIRCULATION AND FAULTY OPERATION OF UNIT ARE AS FOLLOWS:

DISTANCE BETWEEN ADJACENT UNITS 12'-0"
NO MORE THAN ONE WALL CAN BE HIGHER THAN TOP OF THE UNIT
UNIT REFRI CONNECTION : SWEAT BRAZED TYPE

1) SIDE TO WALL 3'-0"
2) REAR TO WALL 3'-0"
3) TOP 50'-0"
4) CONTROL END TO WALL 5'-0"

REV	DATE	ENGINEERING CHANGE	C.N.No.	DRN	CHD

SCALE -NTS | CAD ESTIMATED WEIGHT (KG) | -

BLUE STAR

	DATE	NAME
DRN	Dec-11-18	RM
CHD	Dec-11-18	SSG
APPD	Dec-11-18	RDG

GA LAYOUT
XAC6VS-072MR3

DRAWING No. **GA-XAC6VS-072MR3** SHT 1 OF 1 REV **A**

ALL DIMENSIONS IN MM UNLESS OTHERWISE SPECIFIED | SYMBOLS: ● SAFETY ◐ MAJOR ○ MINOR △ REVISION ⬭ CRITICAL | THIS DOCUMENT IS THE PROPERTY OF BLUE STAR LTD. AND MUST NOT BE USED WITHOUT PRIOR CONSENT | FORMAT NO:BSA3-17B